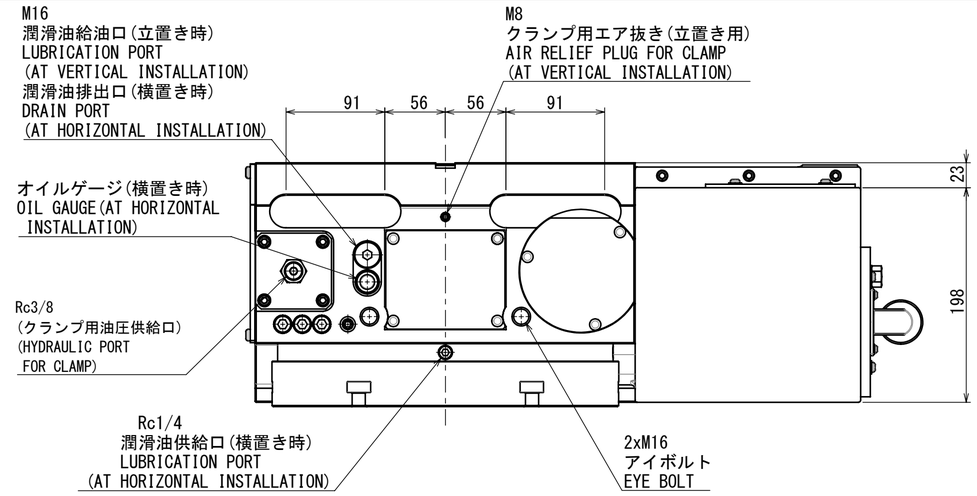

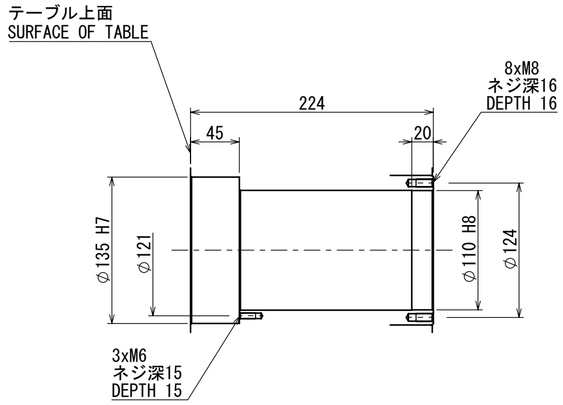

スピンドル穴／SPINDLE THRU-HOLE

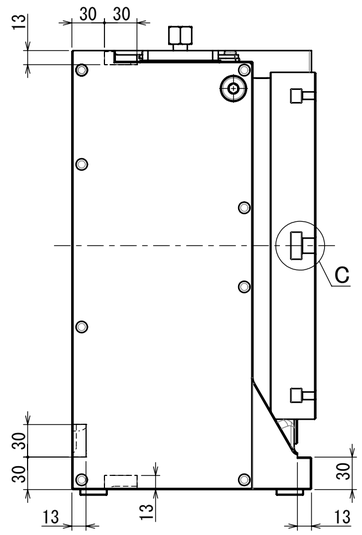

B矢視／VIEW B

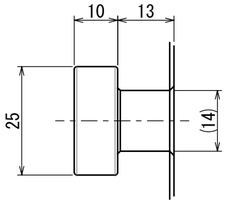

テーブルT溝
T-SLOT FOR ROTARY TABLE

C 部詳細(1：1)

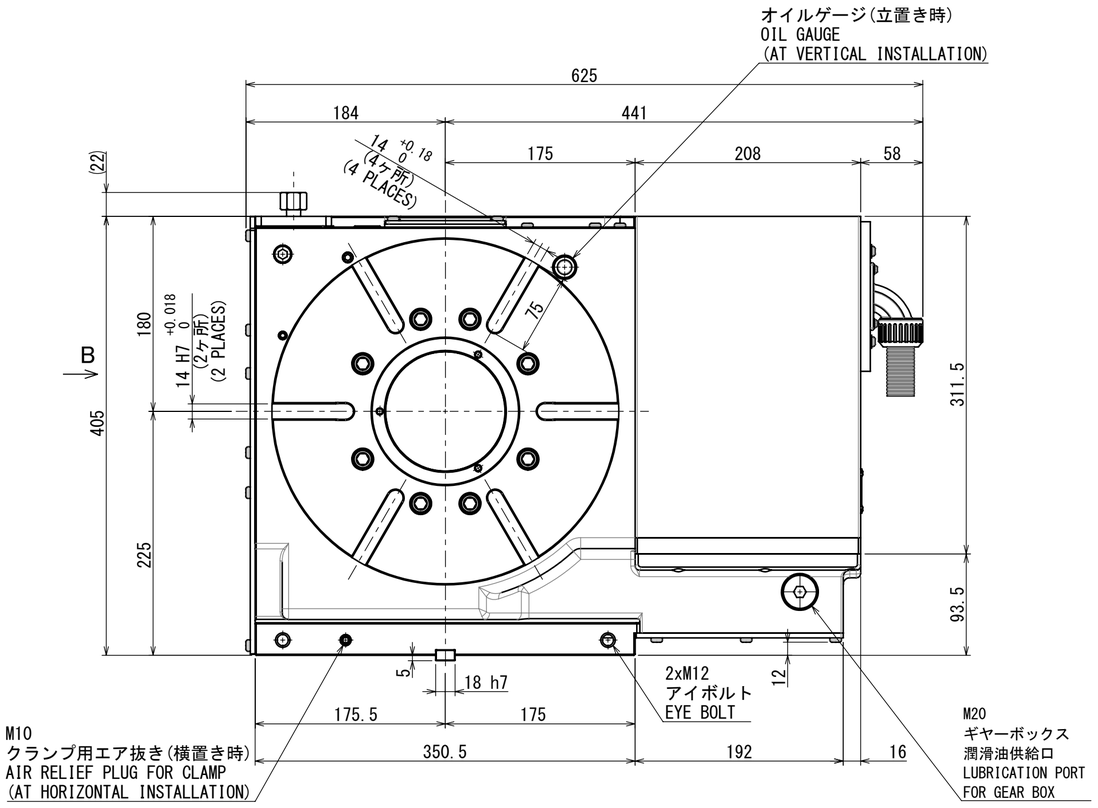

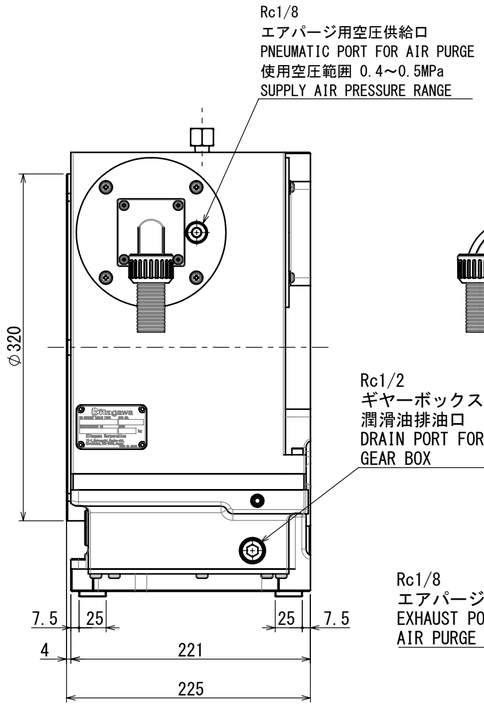

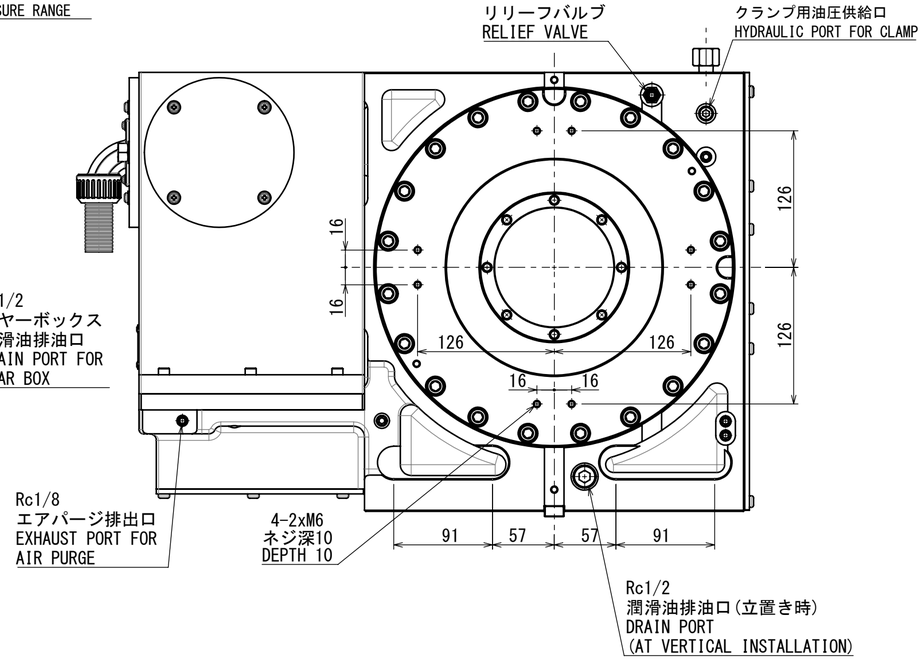

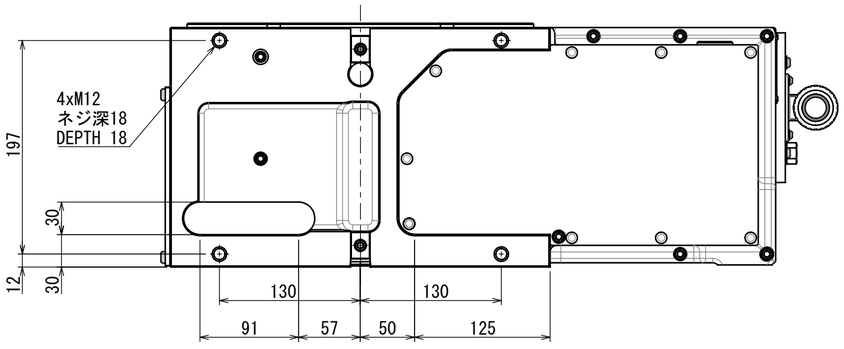

CAREER			SCALE	TYPE	TRX321HV
			1:4	NAME	NC ROTARY TABLE
APPROVAL	INSPECTION	DRW 3D	3RD ANGLE		TRX321HV OUTSIDE VIEW ガイケイ
Kitagawa Corporation		DATE		DRW NO.	61E700513 0 1/1 P