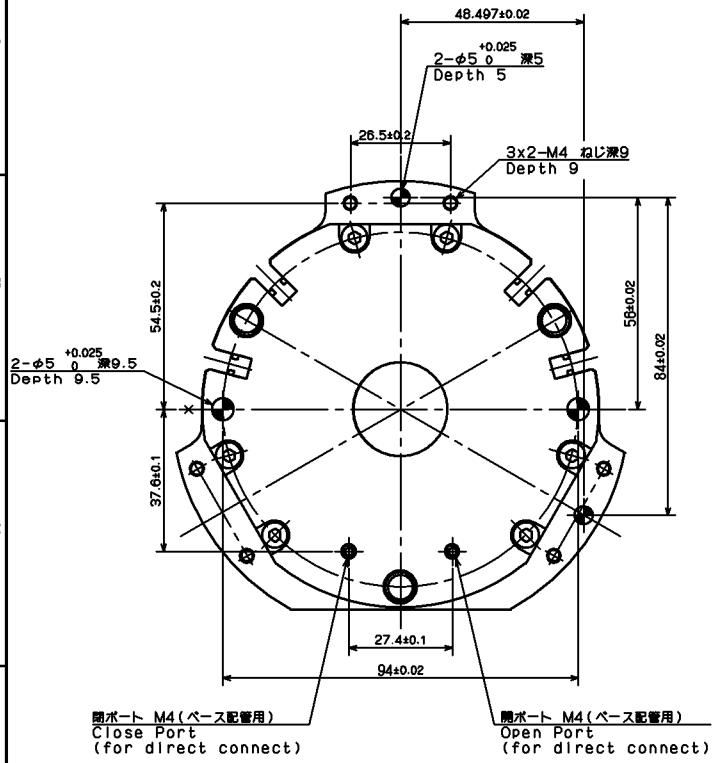

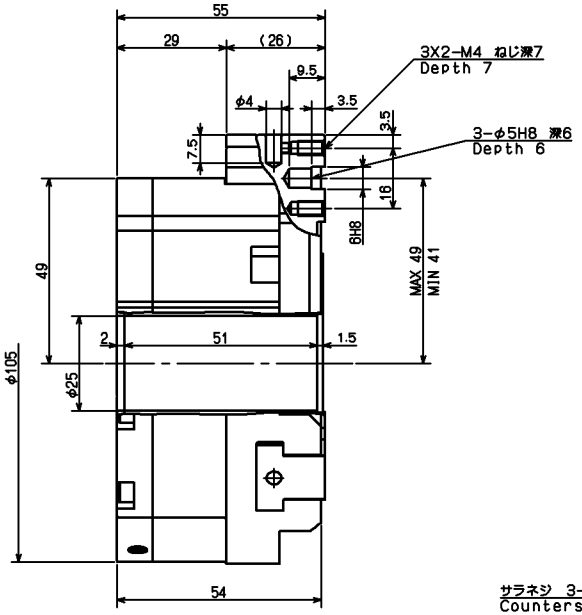

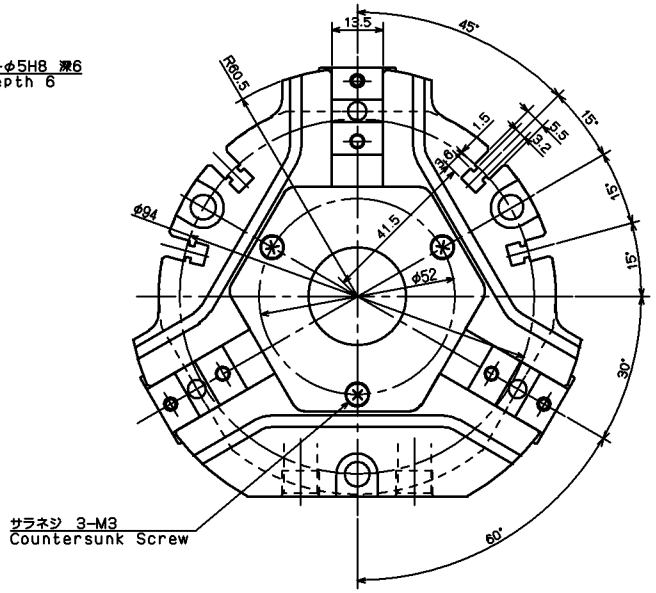

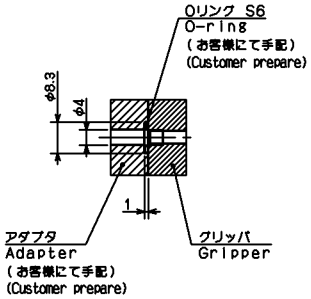

ベース配管詳細
Ditail of direct connecting

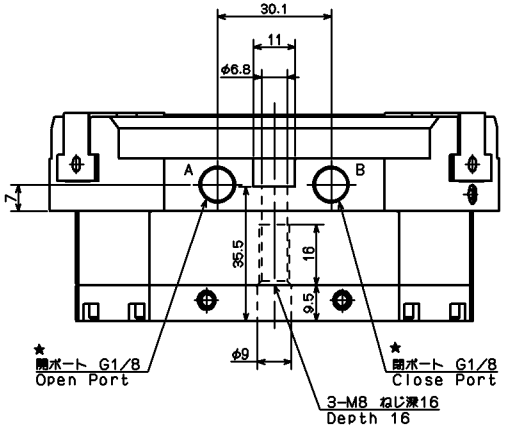

CAREER			SCALE	TYPE	NTB311	WEIGHT	kg
			1:1	NAME	グリッパ GRIPPER		
MANAGER	CHIEF	DRAWN BY	3RD ANGLE		NTB311 カイケイ NTB311 OUTSIDE VIEW		
KITAGAWA IRON WORKS CO.,LTD.		DATE		DRW NO.	61G 28 4072		1